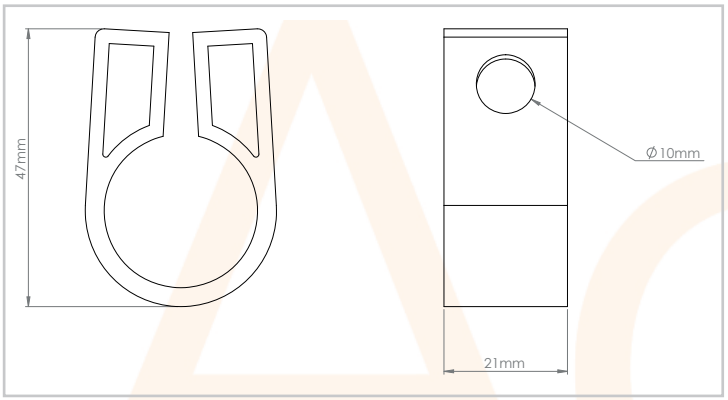

AC22626

27.7mm Single Hole Cleat

Features & Benefits

Suitable for SWA and Heavy Duty Cables

Single Fixing for simple but strong strain relief

Protection from damage caused by vibration and chafing due to excessive movement

Corrosion Resistant

Technical Specification	
Material	Polypropylene (UV Resistant)
Size	No.11 (27.7mm)
Standard of Compliance	IEC61914
Max Cable Dia.	27.7mm
Min Cable Dia.	25.3mm
Stud Hole Size	M10

2-AC22626-2021-V1

Electric Center are not responsible for the accuracy and contents of this datasheet.
All displayed data and specification detail has been provided by the product manufacturer.