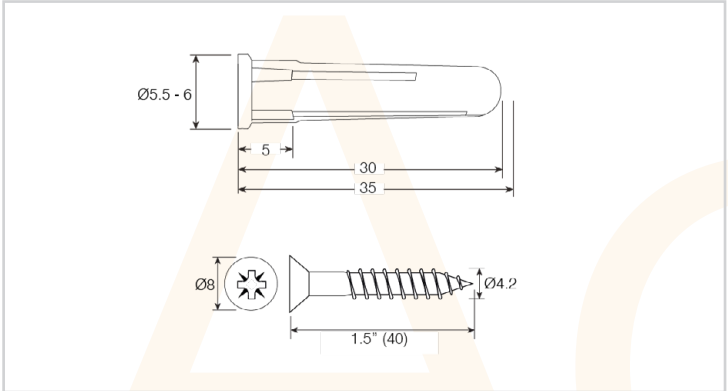

AC23325

Trade Tub - 400 x Red Plastic Wall Plugs & 400 x 8 x 1.5” Countersunk Screws

- All-purpose, cost effective fixing
- Profiled body for extra grip
- Used in masonry and breezeblock
- For med & lightweight applications
- With anti-rotation fins

Technical Specification	
Drill Size (mm)	5.5 - 6
Minimum Drill Depth (mm)	35
Screw Size	8 x 1.5”
Screw Diameter (mm)	4.2
Head Type	Pozi Countersunk Head

2-AC23325-2023-V1

Electric Center are not responsible for the accuracy and contents of this datasheet.
All displayed data and specification detail has been provided by the product manufacturer.