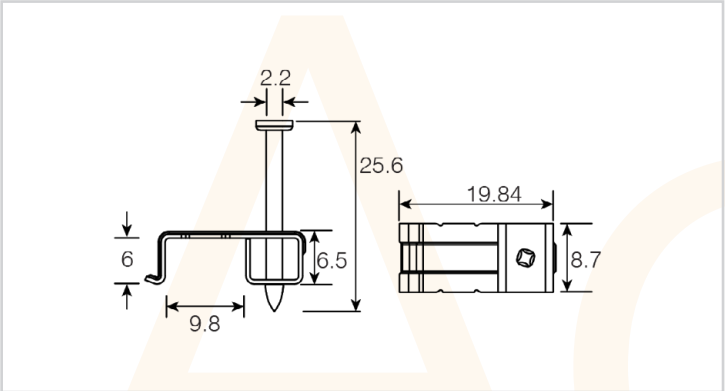

AC23336

Metal Cable Clips for 1.0-2.5mm² T&E Cable

- Made from plated carbon steel
- Metal Cable Clips for fire exits
- Complies with BS7671 Reg 521.10.202
- High temperature protection

Technical Specification	
Cable Dimension (mm)	6 x 10
Suitable Cable Size (mm²)	1 - 2.5 T&E

2-AC23336-2023-V1

Electric Center are not responsible for the accuracy and contents of this datasheet.
All displayed data and specification detail has been provided by the product manufacturer.