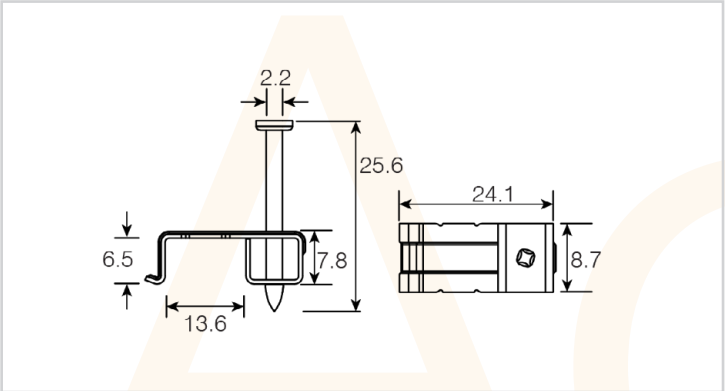

AC23337

Metal Cable Clip for 4-6mm² T&E Cable

- Made from plated carbon steel
- Metal Cable Clips for fire exits
- Complies with BS7671 Reg 521.10.202
- High temperature protection

Technical Specification	
Cable Dimension (mm)	7 x 14
Suitable Cable Size (mm²)	4 - 6 T&E

2-AC23337-2023-V1

Electric Center are not responsible for the accuracy and contents of this datasheet.
All displayed data and specification detail has been provided by the product manufacturer.