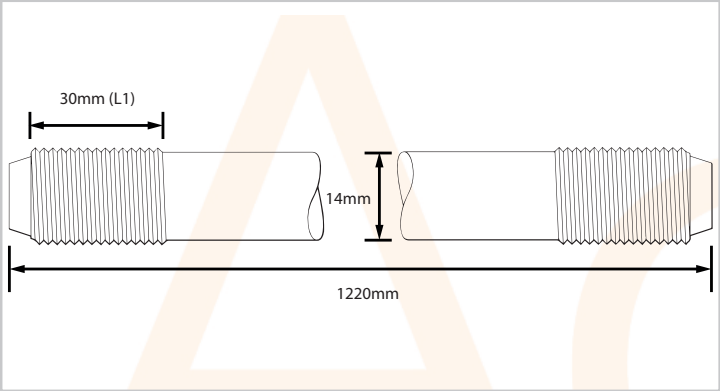

AC2572

Earth Rod 5/8inx4ft C/B

Features & Benefits to go here

High Tensile Strength

Low Carbon steel Core

25microns 99.95% pure copper molecularly bonded on to steel core

Excellent Corrosion Resistance

Cold rolled threads for greater strength, corrosion resistance and preservation of copper coating

Mechanically robust

Technical Specification	
Weight	1.383kg
Colour	Copper
Dimensions	1220MM x 14mm (HxW) 4ft x 5/8" (LxD) 30mm (L1)
Standards	BS7430, BS EN 62305

2-AC2572-2021-V1

Electric Center are not responsible for the accuracy and contents of this datasheet.
All displayed data and specification detail has been provided by the product manufacturer.