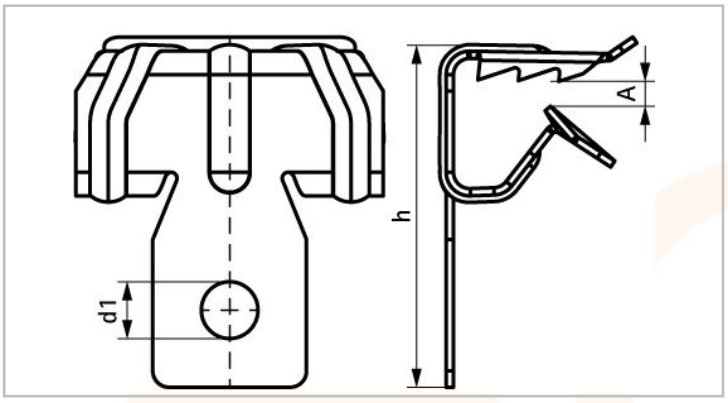

AC2711

ACEL Beam Clip 4-8mm

For a solid fixing to steel construction without the need for welding or drilling.

With fixing hole (Ø 6.5 mm) to fix S-hook, bolt/nut, etc.

Material: spring steel (type CS70)

Surface treatment: Delta-Tone 9000 (480 hours)

Technical Specification	
A (mm)	4-8mm
H (mm)	39mm
Fa,z (N)	950

2-AC2711-2021-V1

Electric Center are not responsible for the accuracy and contents of this datasheet.
All displayed data and specification detail has been provided by the product manufacturer.