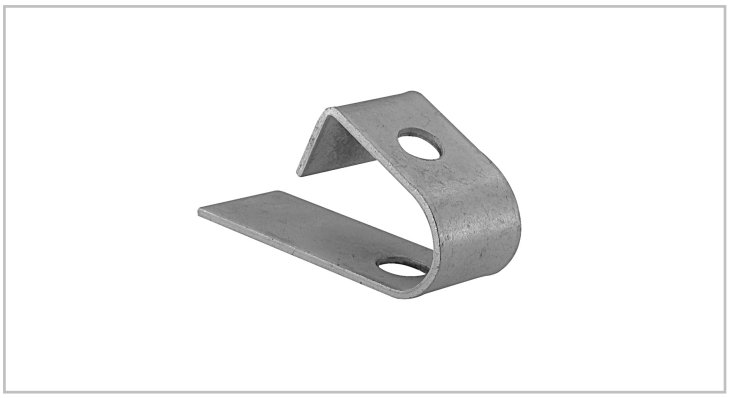

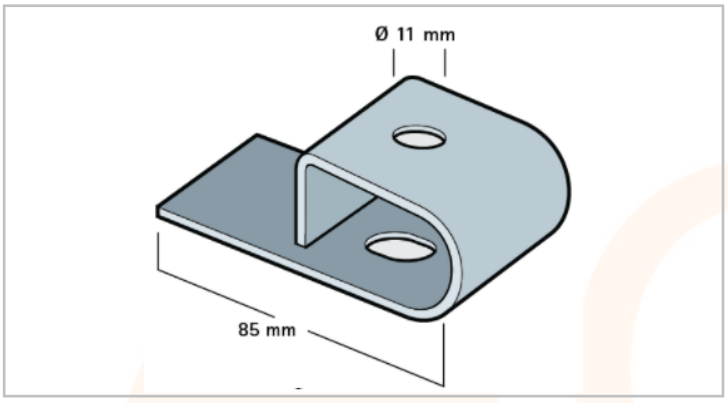

AC2722

ACEL Flange Rod Hanger M8

For fixing to vertical flanges

For threaded rod up to M10

Material: steel

Zinc plated

Technical Specification	
Fa,z	450

2-AC2722-2021-V1

Electric Center are not responsible for the accuracy and contents of this datasheet.
All displayed data and specification detail has been provided by the product manufacturer.