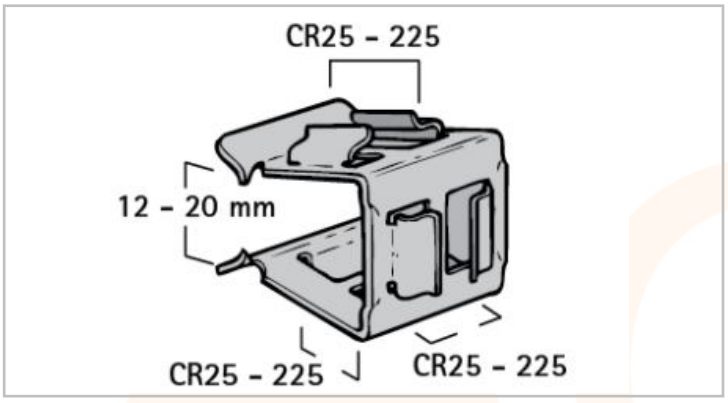

AC2729

ACEL Clip Adaptor 12-20mm

For quick fixing of cables

Material: spring steel (type CS70)

Surface treatment: Delta-Tone 9000 (480 hours)

Technical Specification	
D (mm)	0mm
A (mm)	12-20mm

2-AC2729-2021-V1

Electric Center are not responsible for the accuracy and contents of this datasheet.
All displayed data and specification detail has been provided by the product manufacturer.