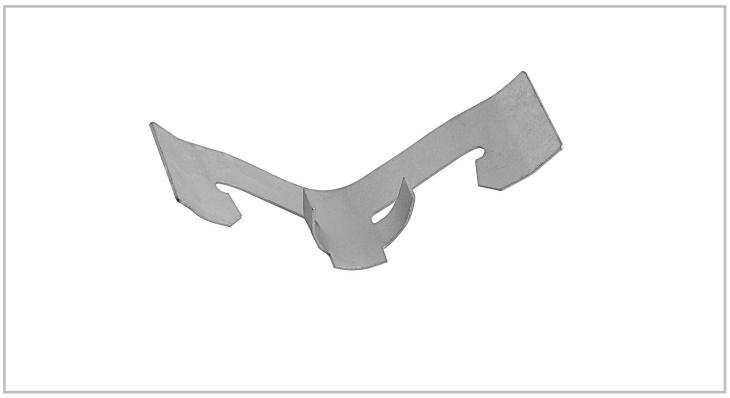

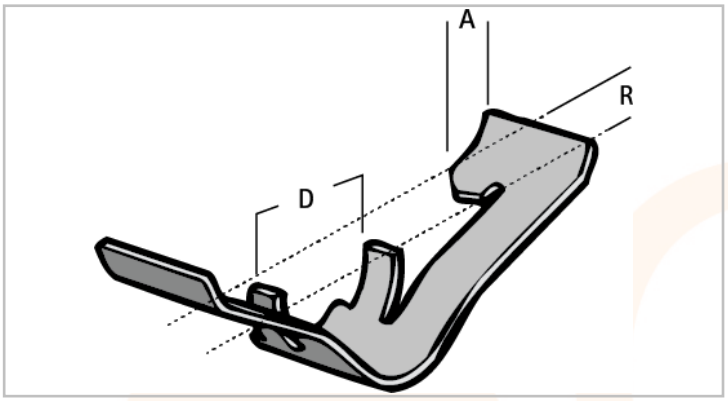

AC2751

ACEL Support Clip 16-20mm

For quick fixing to threaded rods or flanges without the need for welding or drilling

Material: spring steel (type CS70)

Surface treatment: Delta-Tone 9000 (480 hours)

Technical Specification	
D (mm)	16-20mm
A (mm)	6-9mm
Fa,z (N)	450

2-AC2751-2021-V1

Electric Center are not responsible for the accuracy and contents of this datasheet.
All displayed data and specification detail has been provided by the product manufacturer.