Acel

3 - Circuit Protection & Industrial Control

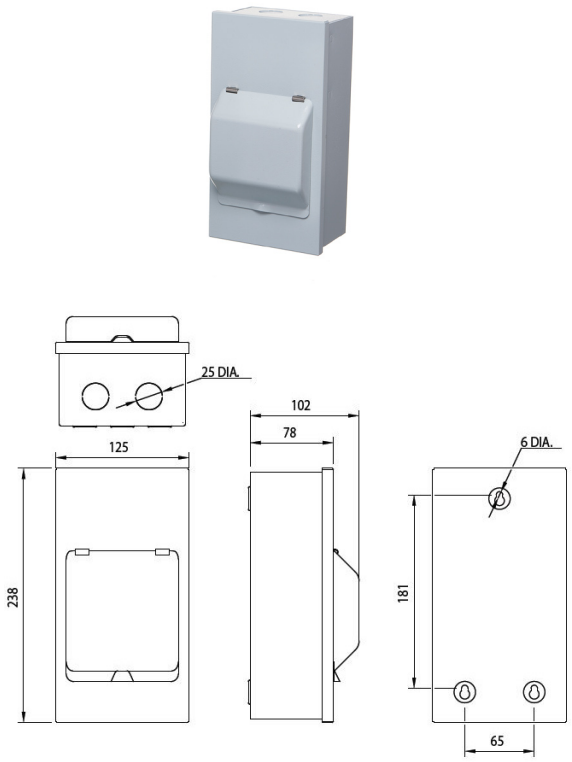

AC3234

4 Module Metal Clad Modular Enclosure (IP40)

2 x 25mm cable entries (top & bottom), Keyhole slots for easy mounting, Complete with earth and neutral terminal & din rail, Epoxy powder coated enclosure

Technical Specification	
Modules	4
Height	238mm
Width	125mm
Depth	78mm
IP Rating	IP40
Colour	RAL 7035

3-AC3234-2021-V1

Electric Center are not responsible for the accuracy and contents of this datasheet.
All displayed data and specification detail has been provided by the product manufacturer.