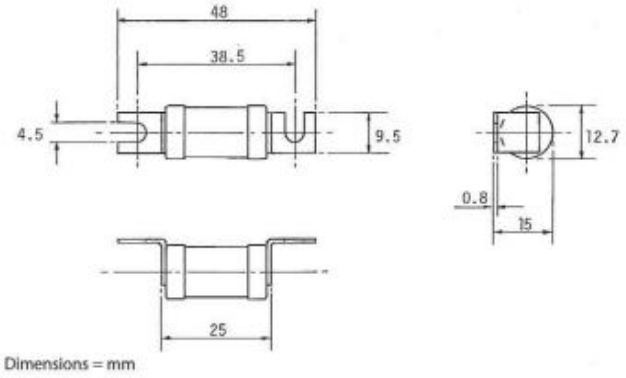

AC3360

6A LST Fuse

Fixing centres: 38.5mm, 48 x 12.7mm / 240V

Technical Specification	
Current Rating	6A
Fixing Centre	38.5mm
Carton Weight	0.12kg

3-AC3360-2021-V1

Electric Center are not responsible for the accuracy and contents of this datasheet.
All displayed data and specification detail has been provided by the product manufacturer.