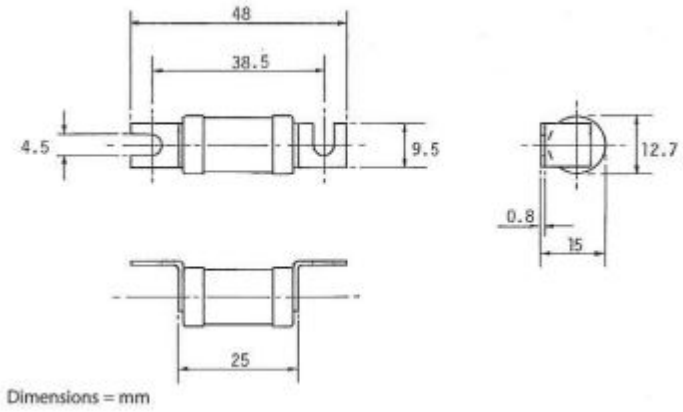

AC3362

16A LST Fuse

Fixing centres: 38.5mm, 48 x 12.7mm / 240V

Technical Specification	
Current Rating	16A
Fixing Centres (mm)	38.5mm
Carton Weight (kg)	0.12

3-AC3362-2021-V1

Electric Center are not responsible for the accuracy and contents of this datasheet.
All displayed data and specification detail has been provided by the product manufacturer.