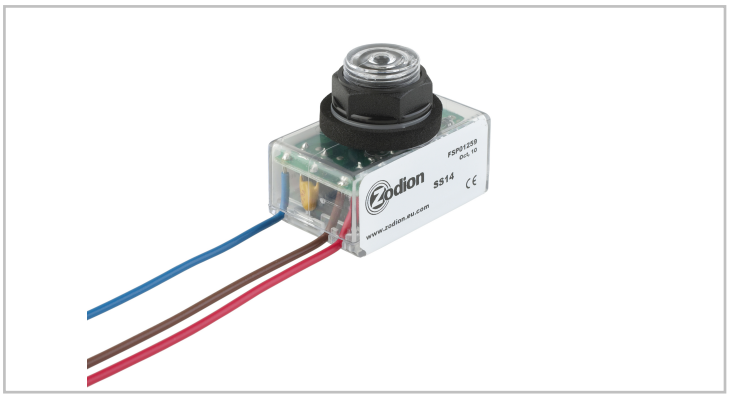

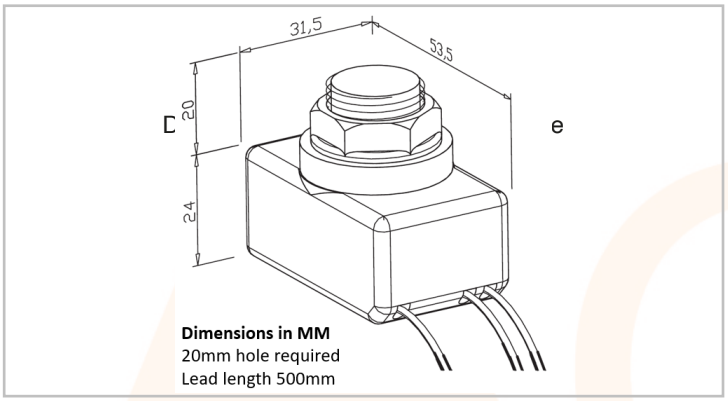

AC4908

SS14 photocell miniature

Dusk to dawn switching of outdoor lighting / streetlights for safety & security

Photocell miniature for lanterns with limited space

Often installed within a weatherproof box for switching of bulk and decorative lighting

LED Compatible

Highly accurate switching to ensure lights on when needed and off when not to save energy

Easy to install

Maintenance free

Manufacturer with 60 years experience and industry leader

Also available - Miniature photocell with remote head for space restricted and more complex applications - AC4909

Technical Specification	
Fixing	20mm sensor head
Construction Material	Polycarbonate Enclosure (UV Stabilised)
Sensor Type	Photodiode
Switching technology	Electro-Magnetic Relay
Switch on level	When daylight lowers to 70 lux
Switch off level	When daylight reaches 105 lux
Switching ratio	Positive
Maximum load levels	LED 250 Watts
	Discharge Lighting (e.g. HPS, MH) 500 Watts
	Incandescent Lighting 1200 Watts
Supply voltage	198-264 Volts
Frequency	47-63Hz
Power Consumption	<0.5 Watts
Operating temperature	-20 degrees to +75 degrees Celcius
Ingress protection	IP66 when installed correctly

4-AC4908-2021-V1

Electric Center are not responsible for the accuracy and contents of this datasheet.
All displayed data and specification detail has been provided by the product manufacturer.