Acel

AC66136
Lo-Watt Pivotal Positive Input Ventilation Unit with 500W Heater

The Lo-Watt Pivotal Positive Input Ventilation unit (PIV) has been designed to prevent and treat condensation and mould quickly. It is perfect for refurbished properties thanks to it being easy to fit for installers and discreet for homeowners.

The Lo-Watt Pivotal offers a quick and simple solution. A loft-mounted positive input fan draws fresh air from the loft, filters it and gently feeds it into the dwelling via a ceiling-mounted diffuser. Clean, fresh filtered air with a lower moisture content dilutes, displaces and replaces, contaminated and moisture-laden air.

Filter
Standard filters supplied with the Lo-Watt Pivotal are G4 (PM10 filtration) which filter out many everyday pollutants such as pollen and dust.

Speed Control
Speed selection is easy. Once the house size is selected based on the number of bedrooms, the Lo-Watt Pivotal automatically selects the correct 'Trickle' and 'Energy Recovery' speeds. The speed can also be adjusted manually if needed and the control interface can be locked to ensure the setting are not tampered with.

Heater
The Lo-Watt PIV comes with a heater fitted to the unit, this helps remove cold air entering the property. The controls allow the Lo-Watt Pivotal with 500W heater to be adjusted making it adaptable for different lifestyles.

Mounting Options
The Lo-Watt PIV comes as standard with both a hanging kit and floor mounting base for quick and easy installation.

Discreet Diffuser
The white circular diffuser is easily installed and fitted. Easy fix features allow for installation against uneven ceiling surfaces with no gaps. The diffuser design reduces air supply noise while increasing performance by 10%. The easy clip blanking plates help to control airflow into the property.

Dimensions (mm)

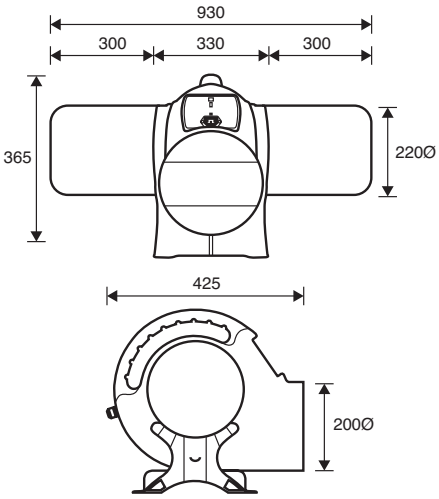

Technical Specification

Room Type:	Wholehouse
Warranty:	3yr
Lo-Watt:	Yes
Speed 1 (l/s):	49
Running Mode:	Continuous
IP Rating:	IPX2
Speed Controllable:	Yes
Spigot Diameter (mm):	200

6-AC66136-2023-V1