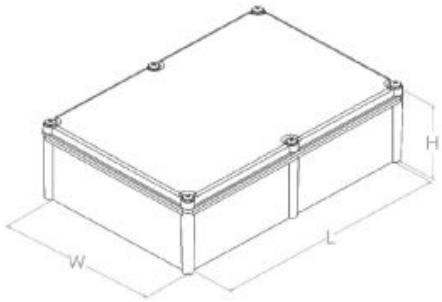

AC73202

125 x 125 x 100 w/ Din Rail 0.112m POS ABS Enclosures Complete with Din Rail

IP67, IK08, Supplied with 35 x 7.5m Din Rail, Heavy duty screw type enclosure, Gasket supplied, Operating temperature -40°C to +85°C, Great for housing Terminal Blocks and Industrial Equipment, Material made from ABS UL94-HB, Range uniformity, Time saving, Flexible installation options, Range flexibility, Reduced install time, Wide range of applications, Sales add on value, Eye catching

Technical Specification	
Protection	IP20, IK08
Din Rail	35mm x 7.5mm, supplied
Material	ABS UL94-HB
Operating Temperature	-40°C to +85°C
Dimensions (L x W x H)	125 x 125 x 100mm
Din Rail Length	112mm

3-AC73202-2021-V1

Electric Center are not responsible for the accuracy and contents of this datasheet.
All displayed data and specification detail has been provided by the product manufacturer.