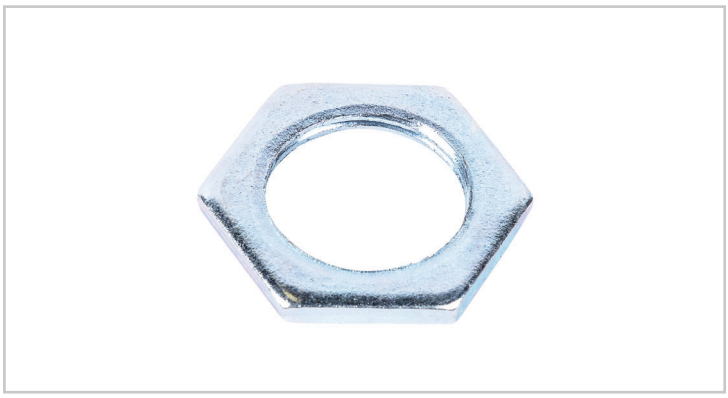

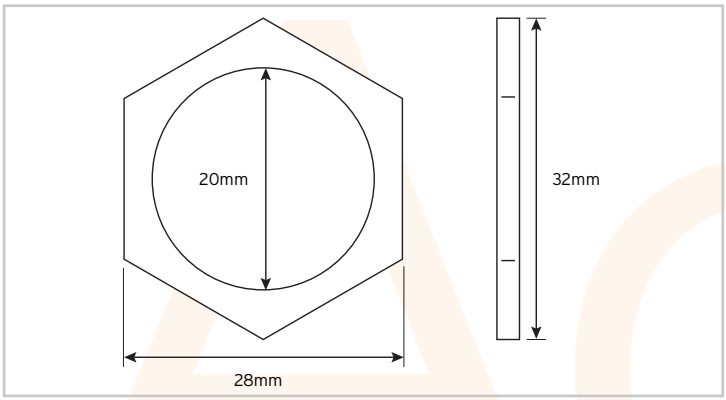

AC7350

Locknut 20mm Galvanised

Features & Benefits

Galvanised

Corrosion Resistant

Suitable for Light Gauge 20mm Conduit

Technical Specification	
Standard of Compliance	BS EN 61386-1:2008
Finish	BZP
Size	20mm
Material	Galvanised Steel

7-AC7350-2021-V1

Electric Center are not responsible for the accuracy and contents of this datasheet.
All displayed data and specification detail has been provided by the product manufacturer.