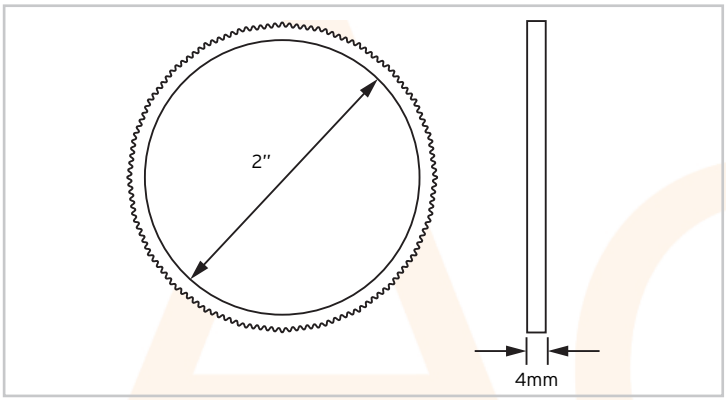

AC7365

Lockring 2in BZP

Features & Benefits

Zinc Plated/Corrosion Resistant

Suitable for 2in. Round Conduit

Milled-Edge Type Lockring

Technical Specification	
Standard of Compliance	BS EN 61386-1:2008
Material	Steel
Finish	'BZP' (Bright Zinc Plate)
Size	2"

7-AC7365-2021-V1

Electric Center are not responsible for the accuracy and contents of this datasheet.
All displayed data and specification detail has been provided by the product manufacturer.