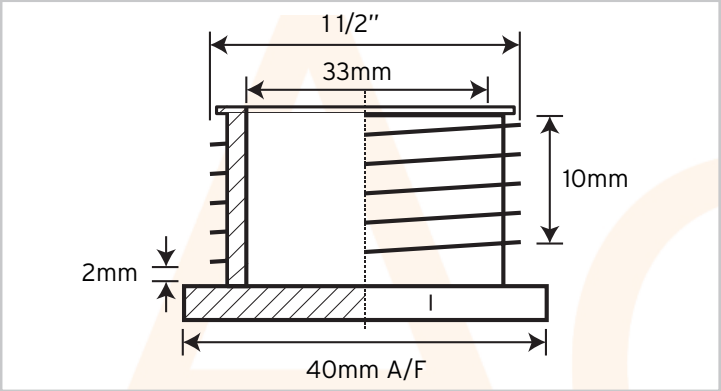


# AC7374

## Male Bush Light 1.5in Brass

Features & Benefits

Suitable for 1.5in Conduit

Male Light Pattern

| Technical Specification | |
|---|---|
| Material | Brass |
| Thread length | 10mm |
| Un-threaded space | 2mm between the head and the thread |
| Size | 1 1/2" |
| Standards | BS EN 61386-1:2008 |

**7-AC7374-2021-V1**



Electric Center are not responsible for the accuracy and contents of this datasheet.
All displayed data and specification detail has been provided by the product manufacturer.