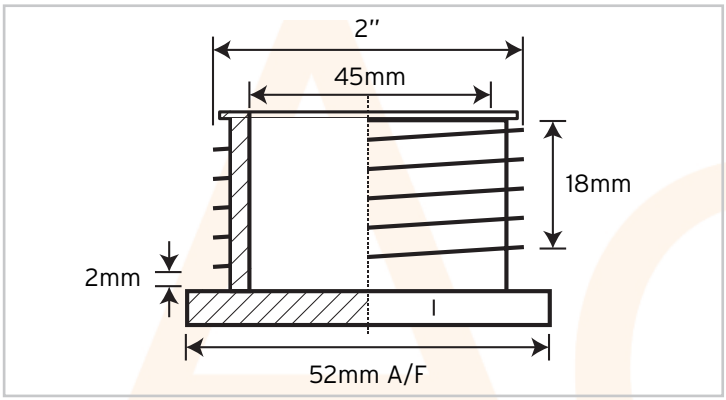

AC7380

Male Bush BESA 2in Brass

Features & Benefits

Suitable for 2in. Brass

Male BESA Pattern

Technical Specification	
Material	Brass
Thread length	18mm
Un-threaded space	2mm
Size	2"
Standards	BS EN 61386-1:2008

7-AC7380-2021-V1

Electric Center are not responsible for the accuracy and contents of this datasheet.
All displayed data and specification detail has been provided by the product manufacturer.