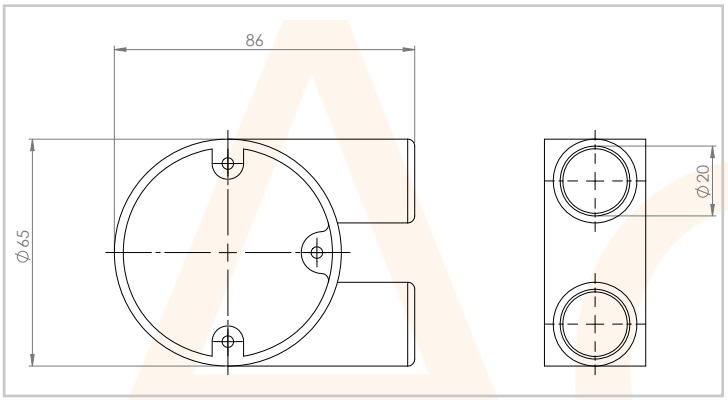

AC7920

U Box 20mm Galvanised

Features & Benefits

Allows for ease of access and installation of cables

Provision for M4 earthing screw

Suitable for 20mm Conduit

Galvanised

Corrosion Resistant (Class4)

Robust heavy gauge material to protect cables

Compatible with galvanised lids and other accessories

Standard fixing centres 50.8mm

Technical Specification	
Type	2 Way, 'U' Branch
Size	20mm
Finish	Galvanised
Standards	BS EN 61386-1:2008 & BS4568
Size	Ø 65mm x 86mm L
Material	Malleable Iron

7-AC7920-2021-V1

Electric Center are not responsible for the accuracy and contents of this datasheet.
All displayed data and specification detail has been provided by the product manufacturer.