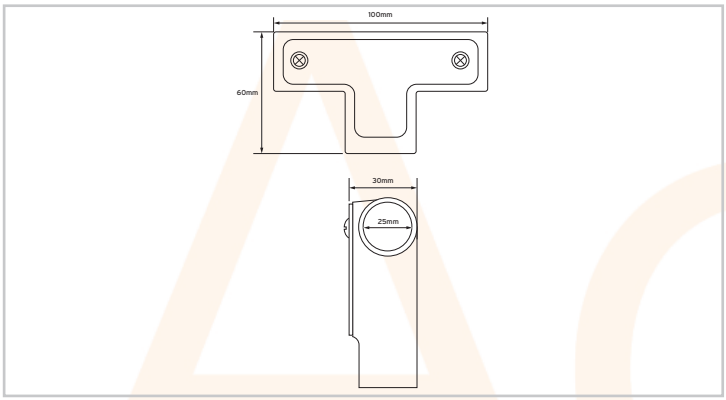

AC7940

Inspection Tee 25mm Galv

Features & Benefits

Allows for ease of acess and installation of cables

Supplied with lid and cover screws

Suitable for 25mm Conduit

Galvanised

Corrosion Resistant (Class4)

Robust heavy gauge material to protect cables

Technical Specification	
Material	Malleable Steel
Size	25mm
Finish	Galv.
Standards	BS EN 61386-1:2008

7-AC7940-2021-V1

Electric Center are not responsible for the accuracy and contents of this datasheet.
All displayed data and specification detail has been provided by the product manufacturer.