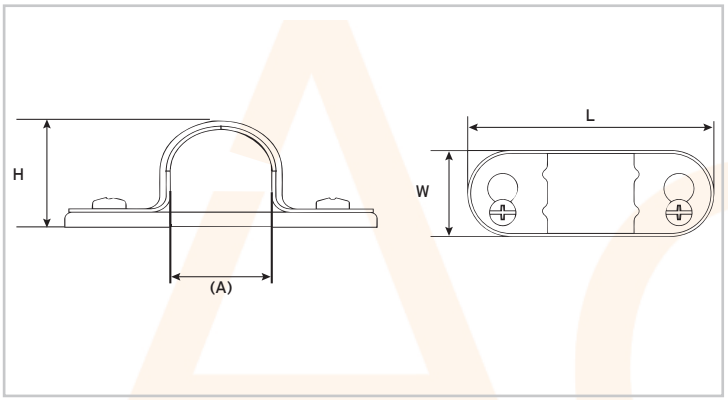

AC7974

Spacer Bar Saddle 25mm Galv

Features & Benefits

Suitable for 25mm conduit

Protects conduit from contact with plaster and cement surfaces

Complies with LU Standard 1-085 (for use on surface and sub-surface locations)

Prevent cable collapsing in fire situations

Galvanised/Corrosion resistant

Technical Specification	
Material	Steel
Size Nominal (A)	25mm
Standard of compliance	BS EN 61386-1:2008
Finish	BZP
Pack Size	100
Dimensions HxWxL	30x22x65mm

7-AC7974-2021-V1

Electric Center are not responsible for the accuracy and contents of this datasheet.
All displayed data and specification detail has been provided by the product manufacturer.